Lecture Notes: Thermodynamics

Semester 3 (PHSA-CC7): University of Calcutta

Dr. Pintu Mandal

Department of Physics
St. Paul's Cathedral Mission College

October 12, 2019

Contents

Preface

This is a lecture note and it does not contain the details of the topics. For clear concept and better understanding, the students are referred to standard text books and other references. While preparing this lecture note, I have taken exclusive help from many sources. Off particular to mention, are Tapgatitatya by *Ashok Ghosh* (West Bengal State Book Board), Heat and Thermodynamics by *Dittman and Zeemansky* (Tata McGraw Hill), Basic Thermodynamics by *Evelyn Guha* (Narosa), Thermodynamics by *Enrico Fremi* (Dover), *Wikipedia.* I have frequently quoted the statements and explanations which I could not make lucid as they originally appear.

1

Entropy

– "*The total energy of the universe is constant; the total entropy is continually increasing.*" - Rudolf Clausius

Syllabus: Concept of Entropy, Clausius Theorem. Clausius Inequality, Second Law of Thermodynamics in terms of Entropy. Entropy of a perfect gas. Principle of Increase of Entropy. Entropy Changes in Reversible and Irreversible processes with examples. Entropy of the Universe. Principle of Increase of Entropy. Temperature-Entropy diagrams for Cycle. Third Law of Thermodynamics. Unattainability of Absolute Zero.

1.1 Clausius Inequality

According to Carnot's theorem, the efficiency of any heat engine (η) can at best be equal to the efficiency of a reversible engine (η_c) i.e. $\eta \leq \eta_c$, given they are operated between same two heat reservoirs. If the reversible engine absorbs Q_1 amount of heat from the hot reservoir at temperature T_1 and releases Q_2 amount of heat into the cold reservoir at temperature T_2 per cycle, the efficiency of the engine

$$\eta_c = 1 - \frac{Q_2}{Q_1} = 1 - \frac{T_2}{T_1} \tag{1.1}$$

as for a reversible engine, $Q_2/Q_1 = T_2/T_1$. Similarly, for any other engine if corresponding heat exchanges are Q_1' and Q_2', the efficiency

$$\eta = 1 - \frac{Q_2'}{Q_1'} \tag{1.2}$$

and by Carnot's theorem

$$\begin{aligned} 1 - \frac{Q_2'}{Q_1'} &\leq 1 - \frac{Q_2}{Q_1} \\ \Rightarrow \frac{Q_2'}{Q_1'} &\geq \frac{Q_2}{Q_1} = \frac{T_2}{T_1} \\ \Rightarrow \frac{Q_1'}{T_1} - \frac{Q_2'}{T_2} &\leq 0 \end{aligned} \tag{1.3}$$

Thus for any heat engine which, operating in a cycle, exchanges heat with two reservoirs, the algebraic sum $\sum(Q/T) \leq 0$, the equality holds for a reversible engine. This observation is also valid for a system exchanging heat with a number of heat reservoirs. A

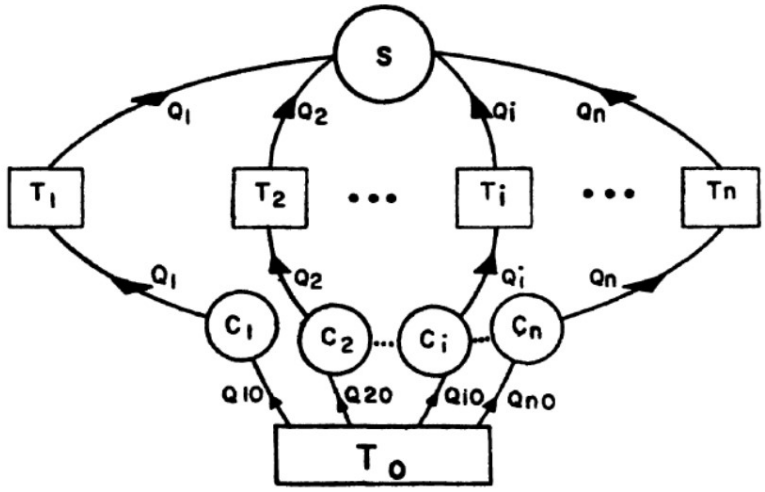

Figure 1.1: Schematic to explain Clausius theorem (Tapgatitatya by Ashok Ghosh).

generalized version, known as Clausius theorem or the Clausius inequality reads

$$\sum_{i=1}^{n} \frac{Q_i}{T_i} \leq 0 \tag{1.4}$$

and we will prove the proposition in the following.

Let us consider a system S which interacts with n number of heat reservoirs at temperatures T_1, T_2, T_3, ... T_n as shown schematically in figure 1.1. It, operating on a cycle, exchanges Q_1, Q_2, Q_3, ... Q_n amount of heat with the reservoirs and delivers some amount of work W_S. Let us also consider n number of Carnot cycles between the reservoirs and a common reservoir maintained at arbitrary temperature T_0. The Carnot cycles may operate as engines or refrigerators but so designed that the quantity of heat Q_i absorbed from or released to the ith reservoir by the system S is compensated by the ith Carnot cycle. Thus if the operation of the system S and n Carnot cycles are synchronized, n reservoirs don't loose or gain any heat. However, the reservoir at temperature T_0 will exchange a net amount of heat per cycle. If the ith Carnot cycle absorbs Q_{i0} amount of heat per cycle from the reservoir at T_0, $Q_{i0} = T_0(Q_i/T_i)$ and hence total heat exchange of the reservoir at T_0 is

$$Q_0 = \sum_{i=1}^{n} Q_{i0} = T_0 \sum_{i=1}^{n} \frac{Q_i}{T_i} \tag{1.5}$$

Assuming the ith Carnot cycle performs W_i amount of work per cycle (may be either positive or negative, negative work means the cycle operates as refrigerator), the total work done by the system and n number of Carnot cycle is

$$W = W_S + \sum_{i=1}^{n} W_i$$

Since the composite system (comprising system S and n Carnot cycles) returns to its original state, the internal energy remains unaltered. Thus, following the first law of thermodynamics, $W = Q_0$. However, if Q_0 (or W) is positive, the operation of the

composite system comes in violation with Kelvin-Planck statement of the second law of thermodynamics. Hence, $Q_0 \leq 0$ i.e. from equation 1.5

$$\sum_{i=1}^{n} \frac{Q_i}{T_i} \leq 0 \tag{1.6}$$

One should, of course, keep in mind the fact that T_0 is the temperature in absolute scale and hence positive. The Carnot cycles are reversible and in addition, if the system S operates reversibly, the composite system can be regarded as reversible one. In the that case, the heat released by the system S in the reservoir at T_i, the Carnot cycle C_i absorbs the same heat and we could follow the previous steps replacing Q_i by $-Q_i$ and arrive at the conclusion

$$\sum_{i=1}^{n} \frac{-Q_i}{T_i} \leq 0 \quad \text{or,} \sum_{i=1}^{n} \frac{Q_i}{T_i} \geq 0 \tag{1.7}$$

Thus for a reversible transformation in system S, both relations 1.6, 1.7 hold simultaneously and hence

$$\sum_{i=1}^{n} \frac{Q_i}{T_i} = 0 \tag{1.8}$$

If the operation of the system S is irreversible, only the inequality sign holds. Assuming the temperatures T_1, T_2, T_3, ... T_n of reservoirs are infinitesimally close, the system S is said to exchange heat with reservoirs of continuously distributed temperature and hence equation 1.6 could be expressed as

$$\oint \frac{\delta Q}{T} \leq 0 \tag{1.9}$$

The equality sign holds for a reversible process while the inequality sign holds for an irreversible process. This is known as Clausius theorem or Clausius inequality.

1.2 Concept of Entropy

Let us consider a system follows a reversible path (marked as I in figure 1.2(a)) to reach from an initial equilibrium state i to a final equilibrium state f and it follows another reversible path (marked as II in figure 1.2(a)) to come back to the initial state, thus completing a reversible cycle. By Clausius theorem (equation 1.9),

$$\begin{aligned} \oint \frac{\delta Q_{rev}}{T} &= 0 \\ \Rightarrow \underbrace{\int_i^f \frac{\delta Q_{rev}}{T}}_{I} + \underbrace{\int_f^i \frac{\delta Q_{rev}}{T}}_{II} &= 0 \\ \Rightarrow \underbrace{\int_i^f \frac{\delta Q_{rev}}{T}}_{I} = -\underbrace{\int_f^i \frac{\delta Q_{rev}}{T}}_{II} &= \underbrace{\int_i^f \frac{\delta Q_{rev}}{T}}_{II} \end{aligned} \tag{1.10}$$

since for a reversible path

$$\int_a^b \frac{\delta Q_{rev}}{T} = -\int_b^a \frac{\delta Q_{rev}}{T}$$

Email: pintuphys@gmail.com

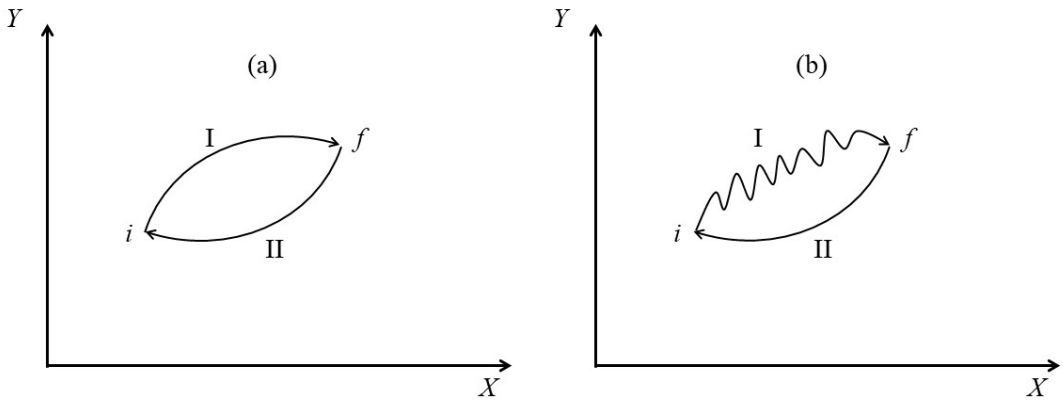

Figure 1.2: (a) Entropy as a state function. (b) Entropy change in irreversible process.

Thus we conclude that the integral $\int(\delta Q_{rev}/T)$ between two equilibrium states is same for all reversible paths i.e. ($\delta Q_{rev}/T$ is an exact differential in a reversible process, though δQ_{rev} is an inexact differential[1]. Let us introduce a state function S such that

$$dS = \frac{\delta Q_{rev}}{T} \tag{1.11}$$

$$\text{or,} \quad S_f - S_i = \int_i^f dS = \int_i^f \frac{\delta Q_{rev}}{T} \tag{1.12}$$

This function S is called the entropy of the system.

1.2.1 Features of entropy definition

Some features on the definition of entropy may be observed from equations 1.12, 1.12. It is proved from Clausius theorem that, if a thermodynamical system follows a reversible path from an equilibrium state i to another equilibrium state f, the integral $\delta Q_{rev}/T$ has the same value in all reversible paths connecting the states. So we can say that this integral depends only on the states i and f. Let us denote the integral as S_{fi}. If e is another equilibrium state of the said thermodynamical system, the values of the integral between the state e, i and e, f will be S_{ie} and S_{fe} respectively. From the definition of integral,

$$S_{fi} = S_{fe} - S_{ie}$$

Since the difference here does not depend on the state e, we can denote S_{fe} and S_{ie} as S_f and S_i respectively, and in that case

$$S_{fi} = S_f - S_i$$

Here S_f and S_i depend only on the state f and i respectively. Thus we can denote S_f (or S_i) as the thermodynamical property of the system in its state f (or i) and this is called the entropy.

The entropy is defined in such a way that it is possible to determine only the difference in entropy between two equilibrium states. However, the entropy of a state is not uniquely

[1]Note that $1/T$ acts as the integrating factor here

specified and that can be chosen arbitrarily. If the entropy of a state in a thermodynamical system chosen arbitrarily, the entropy of all other equilibrium states of the system are uniquely specified. We have observed similar characteristics in the definition of potential in mechanics and electrodynamics.

We can not determine the entropy difference if just two states f and i of a thermodynamical system are specified. For example, let us consider a system at temperature T_f and pressure p_f. Temperature T_i and pressure p_i represent another thermodynamical state of the system. What is the difference in entropy in these two states? In order to determine the difference, we must take the system in a reversible path from the state i to f and we have to use the definition in equation 1.12.

If a system follows an irreversible path from the state i to the state f, how will be the entropy difference determined? We must remember that the definition in equation 1.12 is not applicable in irreversible path. Therefore, if it is at all possible to evaluate the integral in an irreversible path, it does not represent entropy difference between these two states. In order to calculate the entropy difference, we do not need to know how the system has evolved from the state i to f as the difference in entropy depends only on the states i and f. It does not matter how the system has evolved, in order to calculate the entropy difference we shall assume a reversible path between the states i and f, and evaluate the integral in equation 1.12 in that reversible path[2].

1.2.2 Entropy Principle

So far we have defined the change in entropy of a system undergoing a thermodynamical process. The system, during the process, may absorb or release heat and the entropy may accordingly increase or decrease. However, as the system absorbs or releases heat, the surroundings looses or gains same amount of heat and thus any change in the entropy of the system is associated with a change in the entropy of its surroundings. Now what happens to the total entropy of the system and its surroundings? Does it remain same or change? We will explain that the total entropy of the system and its surroundings can never decrease i.e. the change in entropy of the universe $\Delta S \geq 0$. This is called the entropy principle.

Let us consider a system having two equilibrium states i and f. The system is taken from i to f following any thermodynamical process (reversible or irreversible, marked as I in figure 1.2(b)) and from f to i following a reversible process (marked as II in figure 1.2(b)) to complete a cycle. As we have seen in Clausius theorem,

$$\oint \frac{\delta Q}{T} \leq 0 \tag{1.13}$$

[2]Translated from Tapgatitatya by Ashok Ghosh

Email: pintuphys@gmail.com

The equality sign holds if path I is reversible. Now from the equation 1.13 we have

$$\underbrace{\int_i^f \frac{\delta Q}{T}}_{I} + \underbrace{\int_f^i \frac{\delta Q_{rev}}{T}}_{II} \leq 0$$

$$\Rightarrow \underbrace{\int_i^f \frac{\delta Q}{T}}_{I} + (S_i - S_f) \leq 0$$

$$\Rightarrow \Delta S = S_f - S_i \geq \underbrace{\int_i^f \frac{\delta Q}{T}}_{I} \tag{1.14}$$

If the process I is considered to be adiabatic i.e. if the system is considered as an isolated system, $\delta Q = 0$ and thus we conclude for an isolated system

$$\Delta S = S_f - S_i \geq 0 \tag{1.15}$$

This proves the entropy principle.

It should be noted that the result applies only to isolated systems. It is possible with the aid of an external system (surroundings) to reduce the entropy of the system under study. The entropy of the system and the surroundings taken together, however, cannot decrease ($\Delta S = \Delta S_{system} + \Delta S_{surroundings} \geq 0$). When an isolated system is in the state of maximum entropy consistent with its energy, it cannot undergo any further transformation because any transformation would result in a decrease of entropy. Thus, the state of maximum entropy is the most stable state for an isolated system[3]. All spontaneous transformations in a system proceed in such a direction as to increase the entropy of the universe.

1.3 Entropy and Second Law of Thermodynamics

Kelvin-Planck statement of the second law rules out the possibility of designing a perpetuum mobile of the second kind; to be precise, it states complete conversion of heat absorbed from a hot reservoir cannot be converted into work. We have seen that the second law leads to the definition of entropy. All spontaneous processes in nature are irreversible and the entropy of the universe always increases in irreversible process. All spontaneous changes in nature occurs in such a direction that leads to the increase in entropy of the universe. In other words, natural transformations can never happen spontaneously which do not enhance the entropy of the universe. Clausius marked this principle of increase in entropy as the revised version of the second law. Thus we must remember, "The total energy of the universe is constant; the total entropy is continually increasing".

From equation 1.12 it follows, if we consider an infinitesimal reversible transformation during which the system receives some amount of heat δQ at temperature T, the entropy varies by an amount

$$dS = \frac{\delta Q_{rev}}{T} \quad \text{or,} \delta Q_{rev} = TdS \tag{1.16}$$

Equation 1.16 may be said as the mathematical form of the second law of thermodynamics. For a reversible transformation, δQ in the first law ($\delta Q = dU + \delta W$) can be replaced

[3]Thermodynamics by Enrico Fermi

Email: pintuphys@gmail.com

by $\delta Q_{rev} = TdS$ and thus we have

$$TdS = dU + \delta W \tag{1.17}$$

For a hydrostatic system $\delta W = pdV$ and hence $TdS = dU + pdV$. The inexact differential for work and heat have been replaced with exact differentials and in some ways, the thermodynamics is now completely described by this equation.

1.4 Temperature-Entropy Diagram

In reversible process, we can calculate the change in entropy of a system as function of temperature and the variation of entropy with temperature can be shown in an entropy-temperature diagram. Such diagram are useful, particularly in computing efficiency of a reversible engine. The nature of the curve depends on the system and the reversible process under consideration. For example, the entropy does not change in a reversible adiabatic process and it is represented as a straight-line parallel to the T axis in $T - S$ diagram. For a reversible isothermal process, the $T - S$ diagram is another straight-line but parallel to the S axis.

If an infinitesimal heat δQ_{rev} exchanged reversibly at temperature T, the change is entropy $dS = \delta Q_{rev}/T$ or, $\delta Q_{rev} = TdS$. Thus the total heat exchange in a reversible process can be computed by using the integral

$$Q_{rev} = \int_i^f TdS$$

This is basically the area in the temperature-entropy diagram as shown in figure 1.4(a). Thus the area in $T - S$ diagram represents heat, similar to the area representing work done in $p - V$ diagram. For example, we consider the Carnot cycle. As we have seen, it comprises two reversible isothermal processes and two reversible adiabatic processes. The adiabatic cooling and heating are shown as isentropic paths ($b \to c$, $d \to a$) in the $T - S$ diagram while the two reversible isothermal processes are represented by the isotherms $a \to b$, $c \to d$ in figure 1.4(b). The heat is absorbed by the system in the isothermal path $a \to b$ and is equal to the area of the rectangle abef i.e. $Q_1 = T_1(S_2 - S_1)$. The heat is released by the system in the isothermal path $c \to d$ and is equal to the area of the rectangle cefd i.e. $Q_2 = T_2(S_2 - S_1)$. Thus the efficiency of the engine

$$\eta = 1 - \frac{Q_2}{Q_1} = 1 - \frac{T_2}{T_1} \tag{1.18}$$

Note that the nature of Carnot cycle in $T - S$ diagram is independent of the working substance and hence the efficiency of Carnot engine is independent of the working substance, it is determined by the temperature of the reservoirs only.

1.5 Change in Entropy

In order to calculate the change in entropy in a thermodynamic process from one equilibrium state to another, we must have to consider a reversible path between the states so that we can apply the formula

$$\Delta S = S_f - S_i = \int_i^f \frac{\delta Q_{\text{rev}}}{T} \tag{1.19}$$

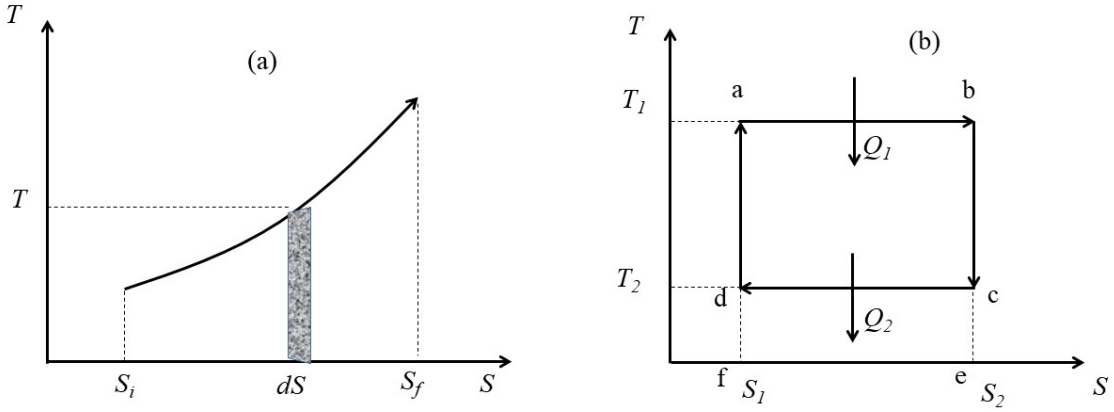

Figure 1.3: (a) $T - S$ diagram and the area of shaded region represents the amount of heat exchanged in a reversible process (b) Carnot cycle in $T - S$ diagram

Here we take some examples to calculate the change in entropy indifferent thermodynamical process.

1.5.1 Entropy change in heat absorption

A body of mass m and specific heat C absorbs heat in a reversible way so that its temperature increases from T_i to T_f. We calculate the change in entropy of the body in this process. The infinitesimal heat absorbed in reversible manner is $\delta Q_{rev} = mCdT$ and hence entropy change

$$\Delta S = S_f - S_i = \int_i^f \frac{\delta Q_{rev}}{T} = mC \int_i^f \frac{dT}{T} = mc \ln\left(\frac{T_f}{T_i}\right)$$

Thus we conclude that the entropy of a body increases as it is heated up while the entropy decreases as the body cools down.

1.5.2 Entropy change in phase transition

Let us consider a first order phase transition (say for example, ice at 273 K $\leftrightarrow$ water at 273 K) of a substance of mass m. If the latent heat corresponding to the phase transition is L, assuming the heat exchange to take place in reversible path we calculate the change in entropy as

$$\Delta S = S_f - S_i = \int_i^f \frac{\delta Q_{rev}}{T} = \frac{mL}{T}$$

as the temperature remains constant in first order phase transition. It is to be noted that $S_f > S_i$ if the heat is absorbed during the transition (for example, ice$\rightarrow$water) and $S_f < S_i$ if the heat is released during the transition (for example, water$\rightarrow$ice).

1.5.3 Entropy change of an ideal gas

1. *Adiabatic process*: For a reversible adiabatic process, $dQ_{\text{rev}} = 0$ and hence from equation 1.19, $\Delta S = 0$ i.e. $S_f = S_i$. Such a thermodynamic process is know

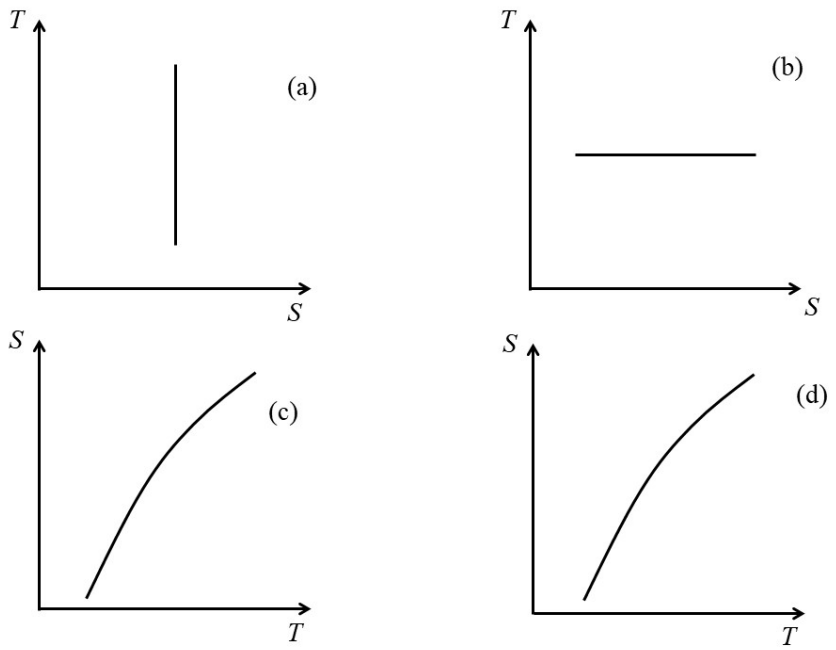

Figure 1.4: $T - S$ diagram of an ideal gas in (a) reversible adiabatic process (b) reversible isothermal process (c) reversible isobaric process and (d) reversible isochoric process

as isentropic process. The process in entropy-temperature diagram is shown in figure 2(a).

2. *Isothermal process*: Let us consider an ideal of n moles undergoing a reversible isothermal change at temperature T. There is no change in internal energy of the gas. From the first law of thermodynamics, $\delta Q = pdV = (nRT/V)dV$. Thus the change in entropy of the system is

$$\begin{aligned} \Delta S = S_f - S_i &= \int_i^f \frac{\delta Q_{rev}}{T} \\ &= \frac{1}{T}\int_i^f \frac{nRT}{V} dV \\ &= nR\ln\left(\frac{V_f}{V_i}\right) = nR\ln\left(\frac{p_i}{p_f}\right) \end{aligned}$$

Thus a reversible isotheral expansion leads to an increase in entropy of an ideal gas. The process is shown in figure in entropy-temperature diagram (figure 2(b)).

3. *Isobaric process*: For an isobaric process, pressure remains constant. For an ideal gas having molar specific heat at constant pressure C_p, the heat absorbed in an infinitesimal change $\delta Q = nC_p dT$ and assuming the process as reversible we calculate

Email: pintuphys@gmail.com

the change in entropy as

$$\begin{aligned}\Delta S = S_f - S_i &= \int_i^f \frac{\delta Q_{rev}}{T} \\ &= nC_p \int_i^f \frac{dT}{T} \\ &= nC_p \ln\left(\frac{T_f}{T_i}\right) = nC_p \ln\left(\frac{V_f}{V_i}\right)\end{aligned}$$

Thus the entropy of an ideal gas increases in a reversible isobaric expansion. The entropy-temperature diagram of this process is shown in figure 2(c).

4. *Isochoric process*: For an isochoric process, volume remains constant. For an ideal gas having molar specific heat at constant volume C_V, the heat absorbed in an infinitesimal change $\delta Q = nC_V dT$ and assuming the process as reversible we calculate the change in entropy as

$$\begin{aligned}\Delta S = S_f - S_i &= \int_i^f \frac{\delta Q_{rev}}{T} \\ &= nC_V \int_i^f \frac{dT}{T} \\ &= nC_V \ln\left(\frac{T_f}{T_i}\right) = nC_V \ln\left(\frac{p_f}{p_i}\right)\end{aligned}$$

Thus the entropy of an ideal gas increases as the pressure is increased in a reversible and isochoric process. The entropy-temperature diagram of this process is shown in figure 2(d).

5. *General Expression*: Let us now calculate a general expression for the change in entropy of an ideal in a reversible path from some initial state (p_i, V_i, T_i) to another equilibrium state (p_f, V_f, T_f). From the first law, we have $\delta Q_{rev} = dU + pdV = nC_V dT + pdV$ and hence the change in entropy is given by

$$\begin{aligned}\Delta S = S_f - S_i &= \int_i^f \frac{\delta Q_{rev}}{T} \\ &= nC_V \int_i^f \frac{dT}{T} + \int_i^f \frac{p}{T} dV \\ &= nC_V \ln\left(\frac{T_f}{T_i}\right) + \int_i^f \frac{nR}{V} dV \; (\because pV = nRT) \\ &= nC_V \ln\left(\frac{T_f}{T_i}\right) + nR \ln\left(\frac{V_f}{V_i}\right) \qquad (1.20)\end{aligned}$$

In terms of the entropy S_0 of a reference state, the entropy of an ideal gas in an equilibrium state (p, V, T) can be expressed as

$$S = nC_V \ln T + nR \ln V + S_0 \qquad (1.21)$$

Here the entropy is expressed as the function of T and V. Alternatively, it could be expressed as function of T and p. Let's start from the first law again: $\delta Q_{rev} = dU + pdV = nC_V dT + pdV = nC_V dT + nRdT - Vdp = nC_p dT - Vdp$, where we

Email: pintuphys@gmail.com

have used the equation state $pV = nRT$ and the relation $C_p - C_V = R$ as applicable for an ideal gas. Now, the change in entropy is

$$\begin{aligned}
\Delta S = S_f - S_i &= \int_i^f \frac{\delta Q_{rev}}{T} \\
&= nC_p \int_i^f \frac{dT}{T} - \int_i^f \frac{V}{T} dp \\
&= nC_p \ln\left(\frac{T_f}{T_i}\right) - \int_i^f \frac{nR}{p} dp \, (\because pV = nRT) \\
&= nC_p \ln\left(\frac{T_f}{T_i}\right) - nR \ln\left(\frac{p_f}{p_i}\right) \qquad (1.22)
\end{aligned}$$

As earlier, the entropy of an ideal gas in an equilibrium state (p, V, T) can be expressed in terms of the entropy of a reference state as

$$S = nC_p \ln T - nR \ln p + S_0 \qquad (1.23)$$

1.5.4 Entropy change due to mixing of ideal gases

As we have seen in equation 1.23, the entropy of an ideal gas of n moles at temperature T and pressure p is given by, in reference to entropy of an arbitrary state,

$$S = nC_p \ln T - nR \ln p + S_0 \qquad (1.24)$$

Thus the total entropy of a number of such system of ideal gases at same temperature T and pressure p before they are mixed, is given by

$$S_i = \sum_k (n_k C_{pk} \ln T - n_k R \ln p + S_{0k}) \qquad (1.25)$$

where n_k represents the number of moles of the kth gas having its molar specific heat at constant pressure C_{pk}.

As the gases are diffused, the temperature of the mixed system remains same as T but the pressure of each gas will be replaced by its partial pressure (say p_k for the kth gas). Thus the entropy of the combined system after mixing is

$$S_f = \sum_k (n_k C_{pk} \ln T - n_k R \ln p_k + S_{0k}) \qquad (1.26)$$

The change in entropy due to mixing

$$\Delta S = S_f - S_i = R \sum_k n_k \ln\left(\frac{p}{p_k}\right) = R \sum_k n_k \ln\left(\frac{n}{n_k}\right) \qquad (1.27)$$

as the partial pressure of an ideal gas is proportional to its number of moles. Note that $n_k < n$, the total number of moles ($n = \sum n_k$) and hence $\Delta S > 0$. Thus we conclude that the entropy increases due to mixing of ideal gases at same temperature and pressure.

As a special case, let us consider only two ideal gases of equal moles i.e. $n_1 = n_2 = n/2$. Thus from equation 1.27, we have $\Delta S = nR \ln 2$.

Gibbs paradox: Let us consider the diffusion of two identical ideal gases of equal moles at same temperature and pressure. If we follow the previous approach, we reach at

conclusion that there will be an increase of entropy after the mixing ($\Delta S > 0$). However, entropy of a system is an extensive property (depends on the extent or the size of the system) i.e. the entropy of equal moles of each of the two identical gases must be equal at a given temperature and pressure. Thus when mixed, the extent of each part gets doubled and so also the entropy, leading to no change in entropy contrary to what follows from previous approach. This apparent contradiction is known as Gibbs paradox. A simple resolution comes from the fact that the concept of partial pressure does not hold for identical gases, i.e. the calculation in previous section is not valid for identical gases. A more convincing explanation comes from statistical mechanics.

1.5.5 Entropy change in free expansion of an ideal gas

Free expansion of an ideal gas is essentially an irreversible process which occurs adiabatically. The consequence of free expansion is $\Delta Q = 0$, $\Delta W = 0$ and hence $\Delta U = 0$. For an ideal gas, as the internal energy is a function of temperature only and $\Delta U = 0$ in free expansion, it does not change the temperature of the gas. To compute the change in entropy we consider the process as equivalent to a reversible isothermal expansion (from some initial volume V_i to a final volume V_f at constant temperature T. The infinitesimal heat exchanged $\delta Q_{rev} = \delta W = pdV = (nRT/V)dV$ and hence the change in entropy

$$\Delta S = S_f - S_i = \int_i^f \frac{\delta Q_{rev}}{T} = nR \int_i^f \frac{dV}{V} = nR \ln\left(\frac{V_f}{V_i}\right)$$

1.5.6 Entropy change of a van-der Waals gas

The equation of state of one mole of a van-der Waals gas is

$$\left(p + \frac{a}{V^2}\right)(V - b) = RT$$
$$\Rightarrow p = \frac{RT}{V-b} - \frac{a}{V^2} \tag{1.28}$$

Assuming the entropy as the function of temperature and volume i.e. $S = S(T, V)$

$$dS = \left(\frac{\partial S}{\partial T}\right)_V dT + \left(\frac{\partial S}{\partial V}\right)_T dV \tag{1.29}$$

In a reversible isochoric process, $\delta Q_{rev} = TdS = C_V dT$ and hence

$$\left(\frac{\partial S}{\partial T}\right)_V = \frac{C_V}{T} \tag{1.30}$$

From Maxwell's relations,

$$\begin{aligned}\left(\frac{\partial S}{\partial V}\right)_T = \left(\frac{\partial p}{\partial T}\right)_V &= \left(\frac{\partial}{\partial T}\right)_V \left(\frac{RT}{V-b} - \frac{a}{V^2}\right) \\ &= \frac{R}{V-b}\end{aligned} \tag{1.31}$$

Thus the infinitesimal change in entropy of a van-der Waals gas is (from equations**??**)

$$dS = \frac{C_V}{T} dT + \frac{R}{V-b} dV \tag{1.32}$$

Email: pintuphys@gmail.com

If the gas is taken from an equilibrium state (p_i, V_i, T_i) to another equilibrium state (p_f, V_f, T_f) in a reversible process, the change in entropy

$$\begin{aligned}\Delta S = S_f - S_i = \int_i^f dS &= \int_i^f \frac{C_V}{T} dT + \int_i^f \frac{R}{V-b} dV \\ &= C_V \ln\left(\frac{T_f}{T_i}\right) + R \ln\left(\frac{V_f - b}{V_i - b}\right)\end{aligned} \tag{1.33}$$

Problem 1: *Explain that the total entropy increases in conduction of heat between two bodies.*

Solution: Let us consider conduction of heat between two bodies at temperatures T_1 and T_2 and let $T_1 > T_2$. Since the conduction takes place from the hotter body to the colder body, the body at temperature T_1 releases heat (say, Q) while the other body absorbs the same amount of heat. The change in entropy of the hotter body is $-Q/T_1$ and that of the colder body is Q/T_2 and thus the total change in entropy is

$$\Delta S = Q/T_2 - Q/T_1$$

Since $T_1 > T_2$, $\Delta S > 0$.

Problem 2: *Explain that the total entropy increases in the process of heat absorption by a body from a reservoir.*

Solution: Let a body of mass m, specific heat c and initially at temperature T_1 absorbs heat from a reservoir at temperature T_2. In equilibrium, the temperature of the body is raised to T_2 by the process of heat absorption and hence its entropy increases. The infinitesimal heat absorbed by the body to raise its temperature by dT is $\delta Q_{rev} = mcdT$ (assuming reversible process) and hence the change in entropy of the body is

$$\Delta S_{body} = \int_i^f \frac{\delta Q_{rev}}{T} = mc \int_{T_1}^{T_2} \frac{dT}{T} = mc \ln\left(\frac{T_2}{T_1}\right)$$

The reservoir looses $\Delta Q = mc(T_2 - T_1)$ amount of heat at constant temperature T_2 and hence its entropy decreases. The change in entropy of the reservoir is

$$\Delta S_{reservoir} = -\frac{\Delta Q}{T_2} = -mc\frac{(T_2 - T_1)}{T_2}$$

Thus the total change in entropy of the body and reservoir

$$\begin{aligned}\Delta S = \Delta S_{body} + \Delta S_{reservoir} &= mc\left[\ln\left(\frac{T_2}{T_1}\right) - \frac{(T_2 - T_1)}{T_2}\right] \\ &= mc\left[\ln\left(\frac{1}{x}\right) - (1 - x)\right]\end{aligned}$$

where $x = T_1/T_2$. From a mathematical identity for a positive number x, $\exp(x-1) > x$ or, $x - 1 > \ln x$ i.e. $\ln(1/x) > 1 - x$. Thus $\Delta S > 0$.

Email: pintuphys@gmail.com

Problem 3: *100 g ice at 0 °C is converted to 100 g water at 50 °C in thermal contact with a heat reservoir. Find the change in entropy of the ice, reservoir and hence of the universe.*

Solution: In the first step, 100 g ice at 0 °C is converted to 100 g water at 0 °C. The total heat absorbed $\Delta Q_1 = mL$ =8000 cal (L =latent heat of ice = 80 cal/g). The change in entropy in this process

$$\Delta S_1 = \frac{\Delta Q_1}{T_0} = \frac{8000}{273} \quad \text{cal/K} = 29.30 \quad \text{cal/K}$$

In the next step, the temperature of the water is raised from 0 °C to 50 °C and the change in entropy of the water in this process

$$\Delta S_2 = \int_i^f \frac{dQ_{rev}}{T} = mc \int_{273}^{323} \frac{dT}{T} = 100 \ln\left(\frac{323}{273}\right) \quad \text{cal/K} = 16.82 \quad \text{cal/K}$$

Thus the change in energy of the system under consideration is $\Delta_{system} = \Delta S_1 + \Delta S_2 = 29.30 + 16.82$ cal/K = 46.12 cal/K.

Total heat lost by the reservoir (at constant temperature $T = 323$K) is $\Delta Q = mL + mc(T - T_0) = 8000 + 5000$ cal = 13000 cal. Thus the entropy change of the reservoir is

$$\Delta S_{reservoir} = -\frac{\Delta Q}{T} = -\frac{13000}{323} \quad \text{cal/K} = -40.25 \quad \text{cal/K}$$

The change in entropy of the universe $\Delta S = \Delta S_{system} + \Delta S_{reservoir} = 5.87$ cal/K.

Problem 4: *Two identical bodies of heat capacity C_p at different temperatures T_1 and T_2 ($T_1 > T_2$) are used as reservoirs of a heat engine. Show that, at constant pressure, the maximum work output of the engine is $W_{max} = C_p(T_1 + T_2 - 2\sqrt{T_1 T_2})$.*

Solution: The heat absorbed at higher temperature (T_1) by the engine is $Q_1 = C_p(T_1 - T_f)$ where T_f is the final temperature attained by the bodies.

The heat rejected to body at lower temperature (T_2) by the engine is $Q_2 = C_p(T_f - T_2)$. Thus the work output of the engine is $W = Q_1 - Q_2 = C_p(T_1 + T_2 - 2T_f)$. W is maximum for a reversible engine i.e. maximum work corresponds to $\Delta S_{universe} = 0$.

The entropy change of the hotter body (per unit mass) is

$$\Delta S_1 = \int_i^f \frac{\delta Q_{rev}}{T} = C_p \int_{T_1}^{T_f} \frac{dT}{T} = C_p \ln\left(\frac{T_f}{T_1}\right)$$

Similarly, the entropy change of the colder body (per unit mass) is

$$\Delta S_2 = \int_i^f \frac{\delta Q_{rev}}{T} = C_p \int_{T_2}^{T_f} \frac{dT}{T} = C_p \ln\left(\frac{T_f}{T_2}\right)$$

When W is maximum, $\Delta S_{universe} = \Delta S_1 + \Delta S_2 = 0$, or

$$C_p \ln\left(\frac{T_f^2}{T_1 T_2}\right) = 0$$
$$\Rightarrow T_f = \sqrt{T_1 T_2}$$

and hence $W = W_{max} = C_p(T_1 + T_2 - 2\sqrt{T_1 T_2})$.

Email: pintuphys@gmail.com

1.6 Entropy and disorder

Gibbs described entropy as a measure of the 'mixtupness' or chaos of a system. Energy in useful form - electrical, mechanical or chemical - is 'organized' and 'directed energy', and only such energy can be utilized to perform work. Heat, on the other hand, is a form of energy due to random motion of atoms and molecules in a body and is therefore 'disorderly' or 'chaotic' in character. Thus, when energy which is organized and can therefore be used in doing work, is converted into heat, the chaos or disorder of the system increases. It is possible to regard all natural process as a transition from ordered to disordered state. There is thus a tendency in nature to proceed towards a state of greater disorder, and the increase in entropy of the universe is a direct consequence of this transition. Entropy is thus a measure of the disorder of the system. To quote Fermi "when an isolated system is in the state of maximum entropy consistent with its energy, it can not undergo any further transformation because any transformation would result in a decrease of entropy. Thus, the state of maximum entropy is the most stable state for an isolated system. All spontaneous transformations in an isolated system proceed in such a direction so as to increase the entropy".

Boltzmann mathematically related the entropy of a system with its disorderliness. If Ω represents the number of microstates of a thermodynamic system in equilibrium, the entropy of the system is a function of Ω i.e. $S = f(\Omega)$. Consider a system composed of two parts and, let S_1 and S_2 be the entropies corresponding to the thermodynamic probabilities Ω_1 and Ω_2 of the two parts respectively. Thus $S_1 = f(\Omega_1)$ and $S_2 = f(\Omega_2)$.

The entropy of a system is an extensive property i.e. the total entropy of the system is the sum of the entropies of the two parts:

$$S = S_1 + S_2 = f(\Omega_1) + f(\Omega_2) \tag{1.34}$$

However, the probability of the total system is the product of the two probabilities i.e. $\Omega = \Omega_1\Omega_2$ and hence

$$S = f(\Omega) = f(\Omega_1\Omega_2) = f(\Omega_1) + f(\Omega_2) \tag{1.35}$$

Thus we conclude that the nature of the function f is such that it obeys the functional equation

$$f(xy) = f(x) + f(y) \tag{1.36}$$

We will now determine the nature of the function by using this property. Since the relation 1.36 is true for all values x and y, we take $y = 1 + \epsilon$ where ϵ is an infinitesimal quantity of the first order. Equation may be rewritten as

$$f(x + x\epsilon) = f(x) + f(1 + \epsilon) \tag{1.37}$$

Expanding both sides of equation 1.37 by Taylor's series expansion and neglecting the higher order terms,

$$f(x) + x\epsilon f'(x) = f(x) + f(1) + \epsilon f'(1) \tag{1.38}$$

For $\epsilon = 0$, we have $f(1) = 0$ and hence

$$\begin{aligned} xf'(x) &= f'(1) = k \quad \text{(constant)} \\ \Rightarrow f'(x) &= \frac{k}{x} \\ \Rightarrow f(x) &= k \ln x + c \quad (c = \text{constant}) \end{aligned} \tag{1.39}$$

Email: pintuphys@gmail.com

Thus $f(\Omega) = k \ln \Omega + c$. The integration constant c may be taken zero. This is allowed as the entropy in a state is indeterminate to the extent of an additive constant. The constant k is actually the Boltzmann constant. Thus finally we have $f(\Omega) = k \ln \Omega$.

This relation between the entropy and thermodynamical probability clearly explains why entropy is directly related to the disorderliness of the system. Higher the disorderliness in the system means higher values of the thermodynamical probability which further implies higher entropy. For a perfect crystal $\Omega = 1$ and $S = 0$.

1.7 Unavailable energy and thermal death

Some energy is required to do the work. In every thermodynamical system, some energy is stored which we call the internal energy. If there are two systems at different temperatures, we can extract some energy as mechanical work with the help of a heat engine. However, all of the internal energy of a system cannot be converted into work- how much internal energy is possible to be converted into work depends on the system. The thermal state of the system will change spontaneously and it will change in a direction so as to increase the entropy of the universe. Natural processes also result in decrease in available energy - energy that can be transformed into work. The available energy decreases after an irreversible transformation. The decrease in available energy and increase in entropy in an irreversible transforation are interrelated as explained in the following with an example.

Consider two reservoirs A and B at temperatures T_1 and T_2 respectively where $T_1 > T_2$. Exchange of heat takes place between A and B while in thermal contact with each other. Let Q amount of heat exchanged over some time. The total entropy increases in this spontaneous process as we have seen in problem 1. The total change in entropy is

$$\Delta S = Q\left(\frac{1}{T_2} - \frac{1}{T_1}\right) \tag{1.40}$$

The maximum work available from the reservoir A at temperature T_1 at the cost of heat Q is

$$W_A = Q\left(1 - \frac{T_0}{T_1}\right) \tag{1.41}$$

where T_0 is the temperature of the lowest temperature bath available. Note that expression in equation 1.41 corresponds to a reversible engine and hence denote maximum available work.

Now, in the process of heat transfer the reservoir B at temperature T_2 gains Q amount of heat and let us see how much work is available from the reservoir at the cost of same amount of heat. Maximum available work

$$W_B = Q\left(1 - \frac{T_0}{T_2}\right) \tag{1.42}$$

It's now clear that $W_A > W_B$ as $T_1 > T_2$. Thus we conclude that available work decreases in reversible transformation. The amount of the work lost in this case

$$\Delta W = W_A - W_B = Q\left(\frac{1}{T_2} - \frac{1}{T_1}\right) T_0 = T_0 \Delta S \tag{1.43}$$

As T_0 and ΔS both are positive quantities, ΔW is positive. Thus increase in entropy in reversible transformation makes a part of the available work unusable. This observation,

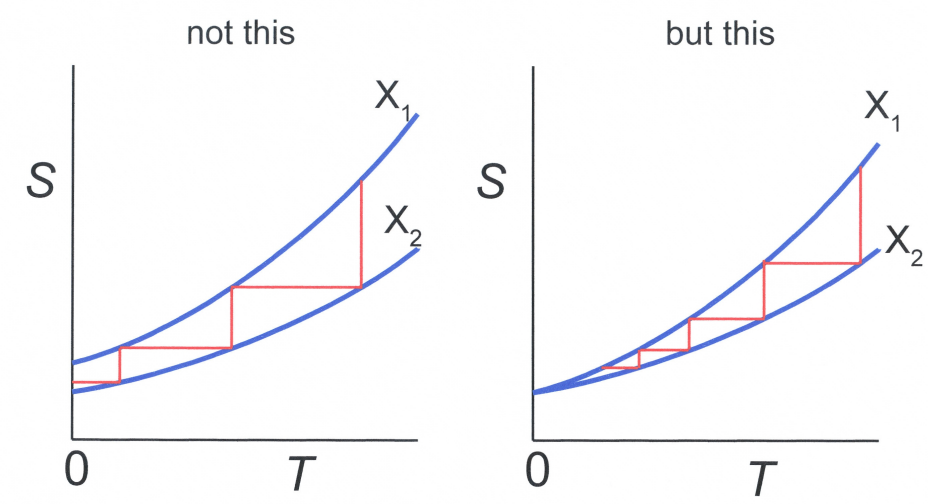

Figure 1.5: Left side: Absolute zero can be reached in a finite number of steps if $S(0, X1) \neq S(0, X2)$. Right: An infinite number of steps is needed since $S(0, X1) = S(0, X2)$ (Wikipedia).

though explained in heat conduction, is applicable in all reversible transformations. As all natural processes are irreversible, we conclude that available energy is always decreasing. Kelvin termed this observation as the principle of degradation of energy. The entropy always tends to increase and one day it will reach its maximum when no heat energy will be available for useful purpose. This is referred to as 'thermal death' of the universe.

1.8 Third Law of Thermodynamics

The Entropy of a closed system in thermodynamic equilibrium approaches a constant value as its temperature approaches absolute zero.

Nernst-Simon statement: The entropy change associated with any condensed system undergoing a reversible isothermal process approaches zero as the temperature at which it is performed approaches 0 K.

Lewis and Randall statement: If the entropy of each element in some crystalline state be taken as zero at the absolute zero of temperature, every substance has a finite positive entropy, but at the absolute zero of temperature the entropy may become zero, and does become zero for all perfect crystalline substances including compound.

1.8.1 Unattainability of absolute zero

It is impossible by any procedure, no matter how idealized, to reduce the temperature of any closed system to zero temperature in a finite number of finite operations.

Explanation: Suppose that the temperature of a substance can be reduced in an isentropic process by changing the parameter X from $X2$ to $X1$. One can think of a multistage nuclear demagnetization setup where a magnetic field is switched on and off in a controlled way. If there were an entropy difference at absolute zero, $T = 0$ could be reached in a finite number of steps. However, at $T = 0$ there is no entropy difference so an infinite number of steps would be needed (figure 1.7).[4]

[4]Content on Third law of thermodynamics will be enlarged in next edition